2024

AP® Physics 1: Algebra-Based

Free-Response Questions

© 2024 College Board. College Board, Advanced Placement, AP, AP Central, and the acorn logo are registered trademarks of College Board. Visit College Board on the web: collegeboard.org.

AP Central is the official online home for the AP Program: apcentral.collegeboard.org.

AP® PHYSICS 1 TABLE OF INFORMATION

CONSTANTS AND CONVERSION FACTORS	
Proton mass, $m_p = 1.67 \times 10^{-27}$ kg	Electron charge magnitude, $e = 1.60 \times 10^{-19}$ C
Neutron mass, $m_n = 1.67 \times 10^{-27}$ kg	Coulomb's law constant, $k = 1/4\pi\varepsilon_0 = 9.0 \times 10^9$ N•m^2/C^2
Electron mass, $m_e = 9.11 \times 10^{-31}$ kg	Universal gravitational constant, $G = 6.67 \times 10^{-11}$ m^3/kg•s^2
Speed of light, $c = 3.00 \times 10^8$ m/s	Acceleration due to gravity at Earth's surface, $g = 9.8$ m/s^2

UNIT SYMBOLS							
	meter,	m	kelvin,	K	watt,	W	degree Celsius, °C
	kilogram,	kg	hertz,	Hz	coulomb,	C	
	second,	s	newton,	N	volt,	V	
	ampere,	A	joule,	J	ohm,	Ω	

PREFIXES		
Factor	Prefix	Symbol
10^{12}	tera	T
10^{9}	giga	G
10^{6}	mega	M
10^{3}	kilo	k
10^{-2}	centi	c
10^{-3}	milli	m
10^{-6}	micro	μ
10^{-9}	nano	n
10^{-12}	pico	p

VALUES OF TRIGONOMETRIC FUNCTIONS FOR COMMON ANGLES							
θ	0°	30°	37°	45°	53°	60°	90°
$\sin\theta$	0	1/2	3/5	$\sqrt{2}/2$	4/5	$\sqrt{3}/2$	1
$\cos\theta$	1	$\sqrt{3}/2$	4/5	$\sqrt{2}/2$	3/5	1/2	0
$\tan\theta$	0	$\sqrt{3}/3$	3/4	1	4/3	$\sqrt{3}$	∞

The following conventions are used in this exam.

I. The frame of reference of any problem is assumed to be inertial unless otherwise stated.
II. Assume air resistance is negligible unless otherwise stated.
III. In all situations, positive work is defined as work done on a system.
IV. The direction of current is conventional current: the direction in which positive charge would drift.
V. Assume all batteries and meters are ideal unless otherwise stated.

© 2024 College Board.
Visit College Board on the web: collegeboard.org.

AP® PHYSICS 1 EQUATIONS

MECHANICS

$v_x = v_{x0} + a_x t$

$x = x_0 + v_{x0}t + \frac{1}{2}a_x t^2$

$v_x^2 = v_{x0}^2 + 2a_x(x - x_0)$

$\vec{a} = \frac{\sum \vec{F}}{m} = \frac{\vec{F}_{net}}{m}$

$|\vec{F}_f| \le \mu |\vec{F}_n|$

$a_c = \frac{v^2}{r}$

$\vec{p} = m\vec{v}$

$\Delta\vec{p} = \vec{F}\Delta t$

$K = \frac{1}{2}mv^2$

$\Delta E = W = F_{\parallel}d = Fd\cos\theta$

$P = \frac{\Delta E}{\Delta t}$

$\theta = \theta_0 + \omega_0 t + \frac{1}{2}\alpha t^2$

$\omega = \omega_0 + \alpha t$

$x = A\cos(2\pi ft)$

$\vec{\alpha} = \frac{\sum \vec{\tau}}{I} = \frac{\vec{\tau}_{net}}{I}$

$\tau = r_{\perp}F = rF\sin\theta$

$L = I\omega$

$\Delta L = \tau\Delta t$

$K = \frac{1}{2}I\omega^2$

$|\vec{F}_s| = k|\vec{x}|$

$U_s = \frac{1}{2}kx^2$

$\rho = \frac{m}{V}$

a = acceleration
A = amplitude
d = distance
E = energy
f = frequency
F = force
I = rotational inertia
K = kinetic energy
k = spring constant
L = angular momentum
ℓ = length
m = mass
P = power
p = momentum
r = radius or separation
T = period
t = time
U = potential energy
V = volume
v = speed
W = work done on a system
x = position
y = height
α = angular acceleration
μ = coefficient of friction
θ = angle
ρ = density
τ = torque
ω = angular speed

$\Delta U_g = mg\Delta y$

$T = \frac{2\pi}{\omega} = \frac{1}{f}$

$T_s = 2\pi\sqrt{\frac{m}{k}}$

$T_p = 2\pi\sqrt{\frac{\ell}{g}}$

$|\vec{F}_g| = G\frac{m_1 m_2}{r^2}$

$\vec{g} = \frac{\vec{F}_g}{m}$

$U_G = -\frac{Gm_1m_2}{r}$

GEOMETRY AND TRIGONOMETRY

Rectangle
$A = bh$

Triangle
$A = \frac{1}{2}bh$

Circle
$A = \pi r^2$
$C = 2\pi r$

Rectangular solid
$V = \ell wh$

Cylinder
$V = \pi r^2 \ell$
$S = 2\pi r\ell + 2\pi r^2$

Sphere
$V = \frac{4}{3}\pi r^3$
$S = 4\pi r^2$

A = area
C = circumference
V = volume
S = surface area
b = base
h = height
ℓ = length
w = width
r = radius

Right triangle
$c^2 = a^2 + b^2$
$\sin\theta = \frac{a}{c}$
$\cos\theta = \frac{b}{c}$
$\tan\theta = \frac{a}{b}$

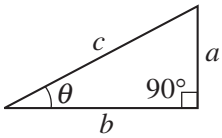

© 2024 College Board.
Visit College Board on the web: collegeboard.org.

Begin your response to **QUESTION 1** on this page.

PHYSICS 1

SECTION II

Time—1 hour and 30 minutes

5 Questions

Directions: Questions 1, 4, and 5 are short free-response questions that require about 13 minutes each to answer and are worth 7 points each. Questions 2 and 3 are long free-response questions that require about 25 minutes each to answer and are worth 12 points each. Show your work for each part in the space provided after that part.

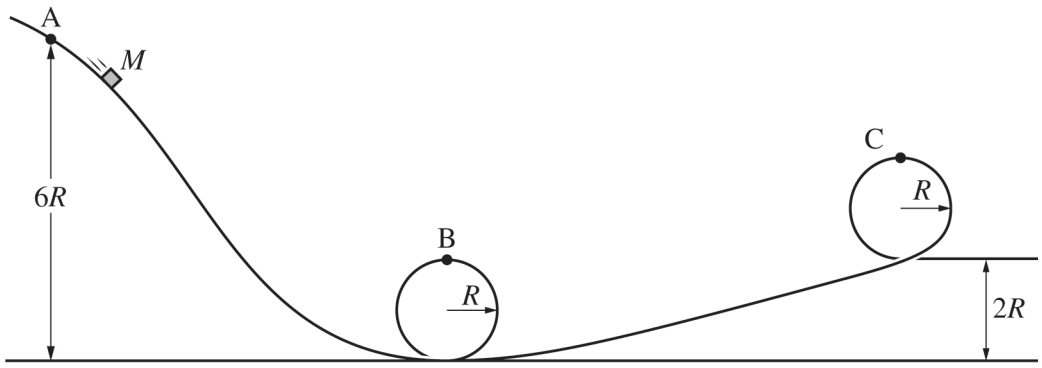

1. (7 points, suggested time 13 minutes)

A block of mass M is released from rest at Point A, a height $6R$ above the horizontal. After being released, the block slides down a track, as shown. When released from Point A, the block does not lose contact with the track at any point. Points B and C are located at the highest points of their respective circular loops, both of radius R. All frictional forces are negligible.

GO ON TO THE NEXT PAGE.

© 2024 College Board.
Visit College Board on the web: collegeboard.org.

Continue your response to **QUESTION 1** on this page.

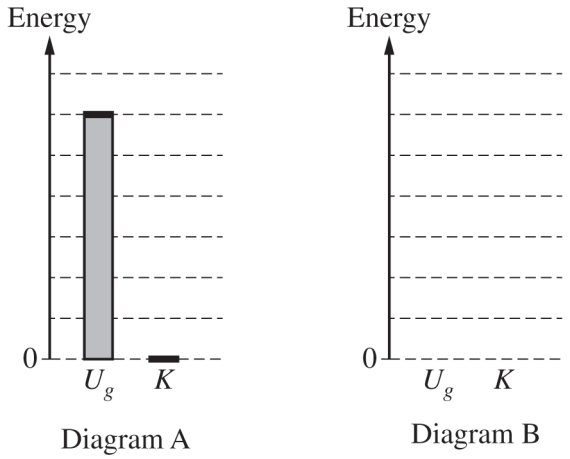

Diagram A shows an energy bar chart that represents the gravitational potential energy U_g of the block-Earth system and the kinetic energy K of the block at Point A, when the block is released from rest at height $6R$.

(a) **Draw** shaded regions in Diagram B that represent the gravitational potential energy U_g and kinetic energy K of the block-Earth system when the block is located at Point B, a height $2R$ above the horizontal.

- Shaded regions should start at the dashed line that represents zero energy.
- Represent any energy that is equal to zero with a distinct line on the zero-energy line.
- The relative height of each shaded region should reflect the magnitude of the respective energy consistent with the scale shown in Diagram A.

(b) Starting with conservation of energy, **derive** an expression for the speed of the block at Point B. Express your answer in terms of R and physical constants, as appropriate. Begin your derivation by writing a fundamental physics principle or an equation from the reference book.

GO ON TO THE NEXT PAGE.

© 2024 College Board.
Visit College Board on the web: collegeboard.org.

Continue your response to **QUESTION 1** on this page.

(c)

i. On the following dot that represents the block, **draw** and **label** the forces (not components) that are exerted on the block at the instant the block slides through Point C. Each force must be represented by a distinct arrow starting on, and pointing away from, the dot.

ii. A student claims that $4R$ is the minimum height of Point A, such that the block can slide through Point C without losing contact with the track after the block is released from rest. Briefly **explain** why this claim is incorrect.

GO ON TO THE NEXT PAGE.

© 2024 College Board.
Visit College Board on the web: collegeboard.org.

Begin your response to **QUESTION 2** on this page.

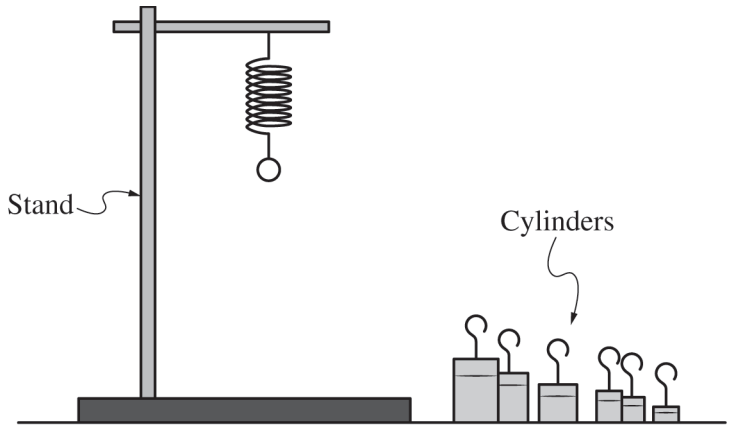

Figure 1

2. (12 points, suggested time 25 minutes)

A student hangs a spring of unknown spring constant k vertically by attaching one end to a stand, as shown in Figure 1. The other end of the spring has a small loop from which small cylinders can be hung. In addition to the spring, the student has access only to a variety of cylinders of unknown masses, a stopwatch, and a digital scale.

(a) Design an experimental procedure the student could use to determine the spring constant k of the spring.

In the following table, list the quantities that would be measured using only the provided equipment in your experiment. Define a symbol to represent each quantity.

In the space below the table, **describe** the overall procedure. Provide enough detail so that another student could replicate the experiment, including any steps necessary to reduce experimental uncertainty. As needed, use the symbols defined in the table. If needed, you may include a simple diagram of the setup with your procedure.

GO ON TO THE NEXT PAGE.

© 2024 College Board.
Visit College Board on the web: collegeboard.org.

Continue your response to **QUESTION 2** on this page.

Quantity to Be Measured	Symbol for Quantity	Equipment for Measurement
		Stopwatch
		Digital scale
Procedure (and diagram, if needed)		

(b)

i. **Indicate** the quantities that could be plotted to produce a linear graph whose slope can be used to determine the spring constant k of the spring.

Vertical axis:_____ Horizontal axis:_____

ii. Briefly **describe** how the slope of the graph would be analyzed to determine the spring constant k of the spring.

GO ON TO THE NEXT PAGE.

© 2024 College Board.
Visit College Board on the web: collegeboard.org.

Continue your response to **QUESTION 2** on this page.

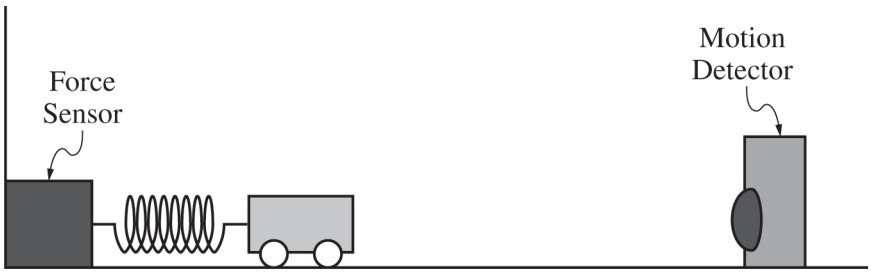

Figure 2

In a different experiment, the student attaches one end of a spring to a force sensor that is attached to a wall. The other end of the spring is attached to a cart with mass $m = 0.25$ kg. The student places a motion detector to the right of the cart, as shown in Figure 2, and pulls the cart to the right a small distance so that the spring is stretched. The student releases the cart from rest, and the cart-spring system oscillates.

The following graphs show the velocity v of the cart and the force F exerted on the cart by the spring as functions of time t.

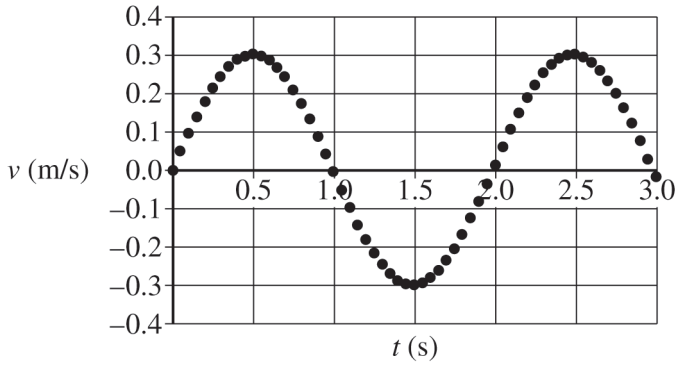

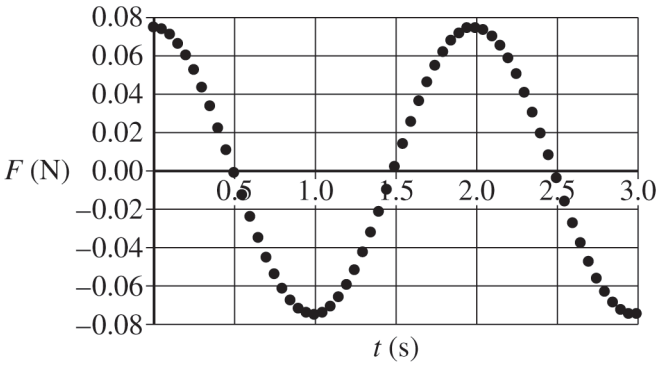

GO ON TO THE NEXT PAGE.

© 2024 College Board.
Visit College Board on the web: collegeboard.org.

Continue your response to **QUESTION 2** on this page.

(c)

i. Using the data in the velocity-time graph, **calculate** the change in kinetic energy of the cart from $t = 0.5\ \text{s}$ to $t = 2.0\ \text{s}$. Show your steps and substitutions.

ii. Using the data in the force-time graph, **estimate** the change in momentum of the cart from $t = 0.5\ \text{s}$ to $t = 2.5\ \text{s}$. Briefly **explain** how you arrived at your estimation.

iii. Do the data from the velocity-time graph confirm your estimation from part (c)(ii) ? Briefly **explain**.

GO ON TO THE NEXT PAGE.

© 2024 College Board.
Visit College Board on the web: collegeboard.org.

Begin your response to **QUESTION 3** on this page.

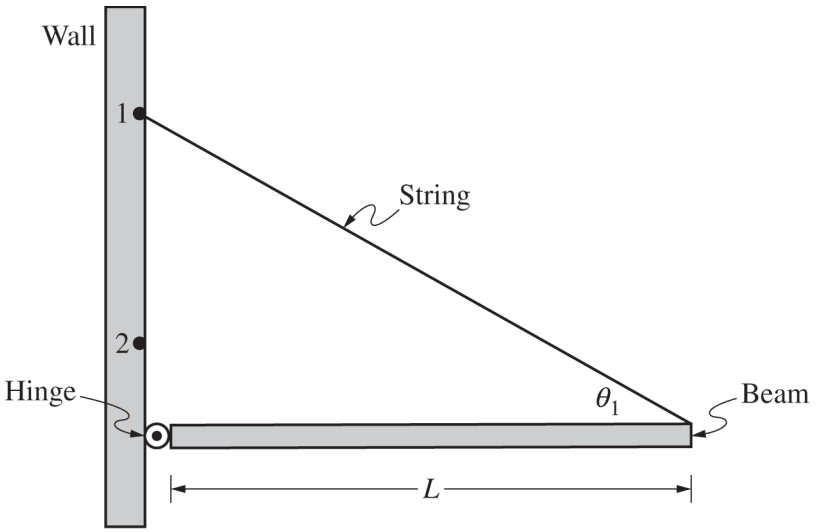

Figure 1

3. (12 points, suggested time 25 minutes)

The left end of a uniform beam of mass M and length L is attached to a wall by a hinge, as shown in Figure 1. One end of a string with negligible mass is attached to the right end of the beam. The other end of the string is attached to the wall above the hinge at Point 1. The beam remains horizontal. The hinge exerts a force on the beam of magnitude F_H, and the angle between the beam and the string is $\theta = \theta_1$.

(a) The following rectangle represents the beam in Figure 1. On the rectangle, **draw** and **label** the forces (not components) exerted on the beam. Draw each force as a distinct arrow starting on, and pointing away from, the point at which the force is exerted.

GO ON TO THE NEXT PAGE.

© 2024 College Board.
Visit College Board on the web: collegeboard.org.

Continue your response to **QUESTION 3** on this page.

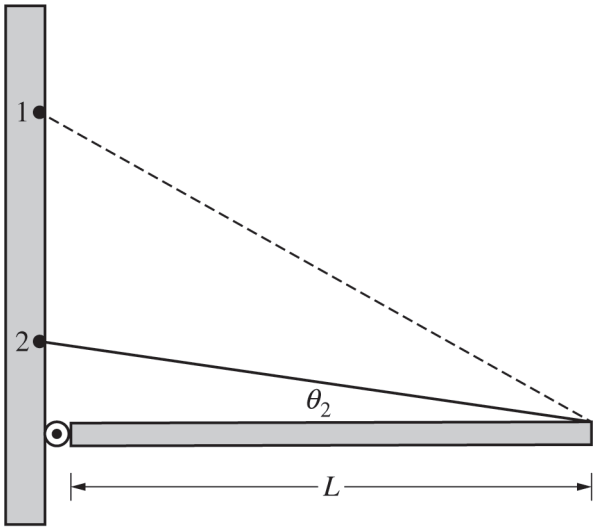

Figure 2

(b) The string is then attached lower on the wall, at Point 2, and the beam remains horizontal, as shown in Figure 2. The angle between the beam and the string is $\theta = \theta_2$. The dashed line represents the string shown in Figure 1.

The magnitude of the tension in the string shown in Figure 1 is F_{T1}. The magnitude of the tension in the string shown in Figure 2 is F_{T2}. **Indicate** which of the following correctly compares F_{T2} with F_{T1}.

_____ $F_{T2} > F_{T1}$ _____ $F_{T2} < F_{T1}$ _____ $F_{T2} = F_{T1}$

Briefly **justify** your answer, using qualitative reasoning beyond referencing equations.

(c) Starting with Newton's second law in rotational form, **derive** an expression for the magnitude of the tension in the string. Express your answer in terms of M, θ, and physical constants, as appropriate. Begin your derivation by writing a fundamental physics principle or an equation from the reference book.

GO ON TO THE NEXT PAGE.

© 2024 College Board.
Visit College Board on the web: collegeboard.org.

Continue your response to **QUESTION 3** on this page.

(d) Is your derived equation in part (c) consistent with your justification in part (b) ? **Explain** your reasoning.

(e) The string is cut, and the beam begins to rotate about the hinge with negligible friction. On the following axes, **sketch** the angular speed of the beam as a function of time for the time interval while the beam falls but before the beam becomes vertical.

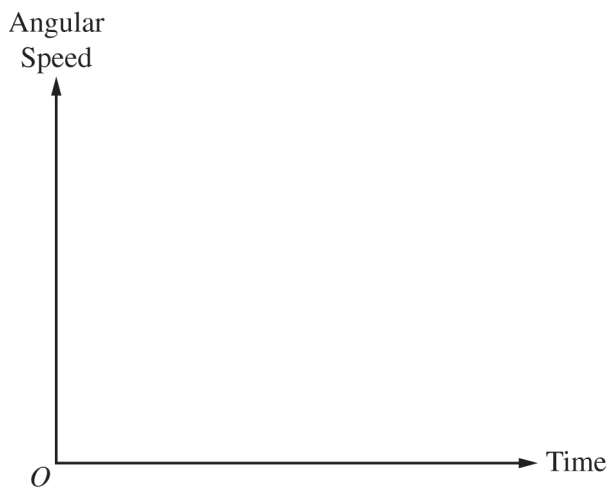

GO ON TO THE NEXT PAGE.

© 2024 College Board.
Visit College Board on the web: collegeboard.org.

Begin your response to **QUESTION 4** on this page.

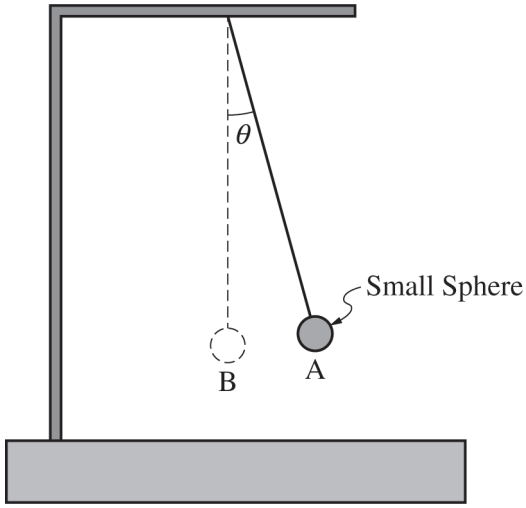

4. (7 points, suggested time 13 minutes)

A simple pendulum consists of a small sphere that hangs from a string with negligible mass. The top end of the string is fixed. The sphere is pulled to Point A so that the string makes a small angle θ with the vertical, as shown. The sphere is then released from rest and swings through its lowest point at Point B. The work done on the sphere by Earth between points A and B is W_E.

The pendulum is then taken to Planet X. The mass of Planet X is the same as the mass of Earth, but the radius of Planet X is greater than the radius of Earth. The sphere is again brought to Point A (displaced θ from the vertical), released from rest, and swings through its lowest point at Point B. The work done on the sphere by Planet X between points A and B is W_X.

(a) **Justify** why W_X is less than W_E.

GO ON TO THE NEXT PAGE.

© 2024 College Board.
Visit College Board on the web: collegeboard.org.

Continue your response to **QUESTION 4** on this page.

A new pendulum is made by hanging the same small sphere from a different string with negligible mass. The new string is slightly elastic, and the length of the string may increase or decrease depending on the tension applied to the string. On Earth, when the sphere is again displaced θ from the vertical and released from rest, the new pendulum oscillates with period T_E.

The new pendulum is then taken to a different planet, Planet Y. The radius of Planet Y is the same as the radius of Earth, but the mass of Planet Y is larger than the mass of Earth. On Planet Y, when the sphere is again displaced from the vertical and released from rest, the new pendulum oscillates with period T_Y.

(b) In a clear, coherent paragraph-length response that may also contain drawings, **explain** how T_Y could be larger than T_E but also could be smaller than T_E.

GO ON TO THE NEXT PAGE.

© 2024 College Board.
Visit College Board on the web: collegeboard.org.

Begin your response to **QUESTION 5** on this page.

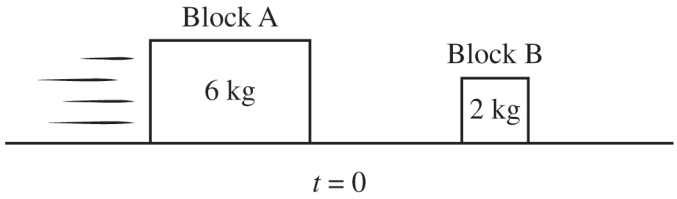

Figure 1

5. (7 points, suggested time 13 minutes)

At time $t = 0$, Block A slides along a horizontal surface toward Block B, which is initially at rest, as shown in Figure 1. The masses of blocks A and B are 6 kg and 2 kg, respectively. The blocks collide elastically at $t = 1.0$ s, and as a result, the magnitude of the change in kinetic energy of Block B is 9 J. All frictional forces are negligible.

(a) **Determine** the speed of Block B immediately after the collision.

GO ON TO THE NEXT PAGE.

© 2024 College Board.
Visit College Board on the web: collegeboard.org.

Continue your response to **QUESTION 5** on this page.

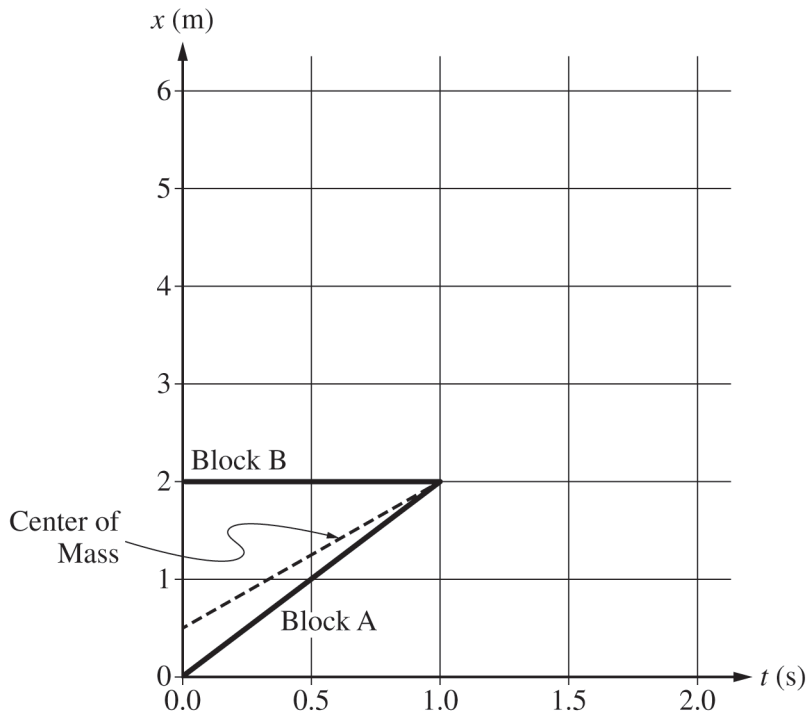

Figure 2

The graph shown in Figure 2 represents the positions x of Block A, Block B, and the center of mass of the two-block system as functions of t between $t = 0$ and $t = 1.0\,\text{s}$.

(b) On the graph in Figure 2, **draw** and **label** three lines to represent the positions of Block A, Block B, and the center of mass of the two-block system as functions of t between $t = 1.0\,\text{s}$ and $t = 2.0\,\text{s}$. Each line should be distinctly labeled.

(c) Consider if in the original scenario, instead of colliding elastically, the blocks collided and stuck together. **Describe** how the line drawn for the center of mass in part (b) would change, if at all. Briefly **justify** your response.

GO ON TO THE NEXT PAGE.

© 2024 College Board.
Visit College Board on the web: collegeboard.org.

STOP

END OF EXAM

© 2024 College Board.
Visit College Board on the web: collegeboard.org.